Cad Ref. FMAW03-0

METRO SERIES
F100MS AWNING WINDOW
INTERNAL BOX MULLION / TRANSOM
CROSS SECTION

Date 01.06.11 **Scale** 1:2

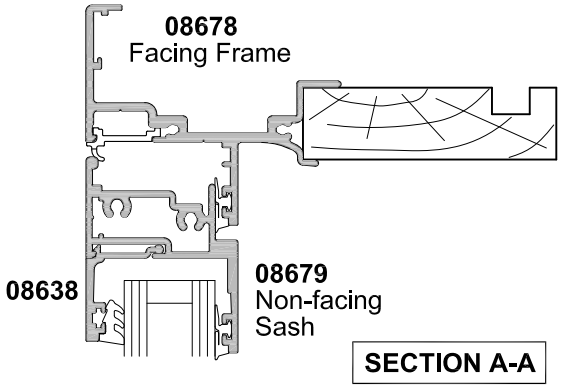

SECTION A-A

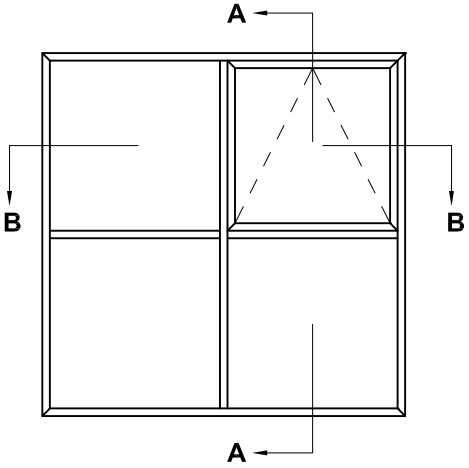

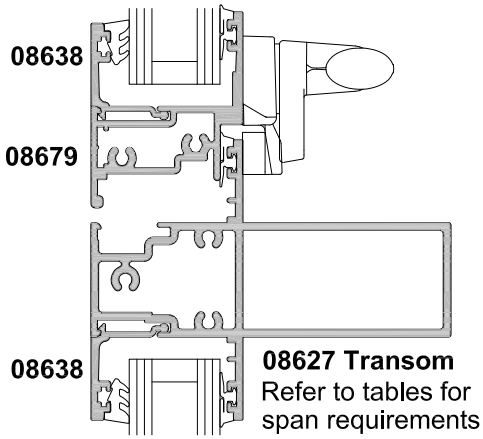

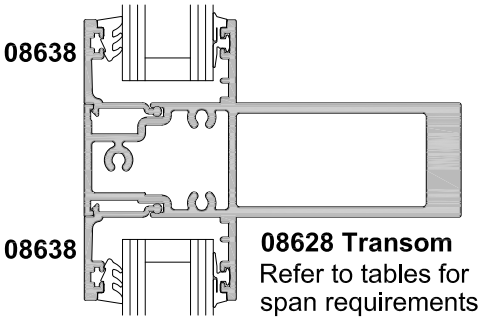

HEAVY DUTY TRANSOM OPTION

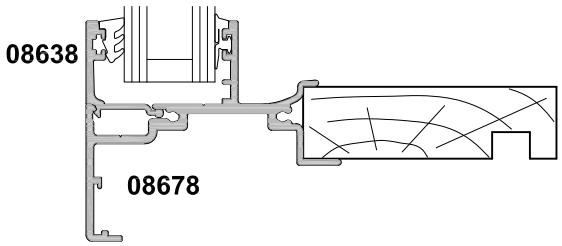

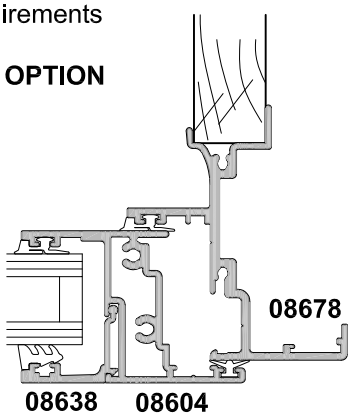

FACING SASH OPTION
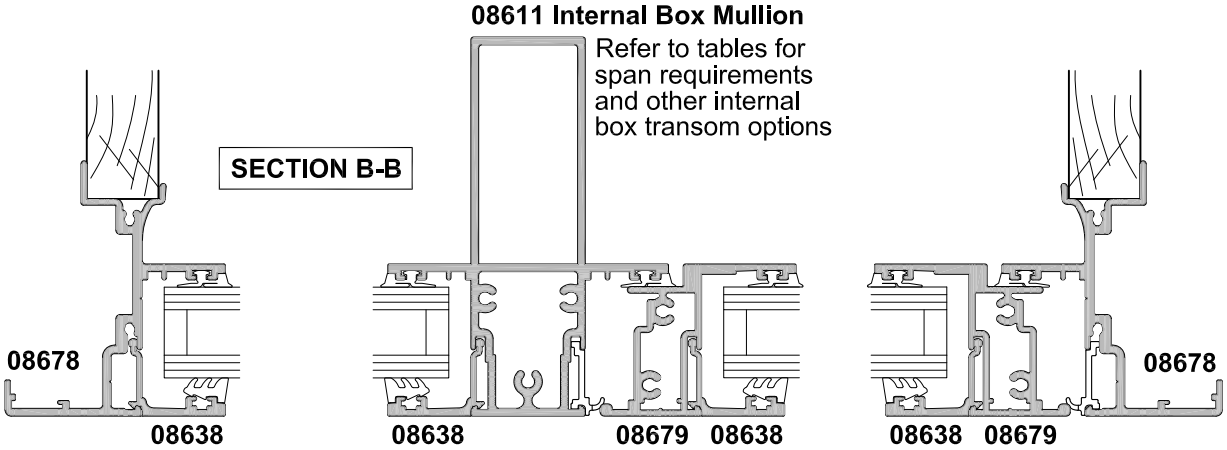
SECTION B-B