FENCING

EDGESMITH

Insert Gate Lock

Swing Gate Hardware

PRODUCT CODE:

FORTYLOCK-SET

MATERIAL:

- Stainless Steel Mechanism
- Aluminium Handle

FINISH:

Black

SET INCLUDES:

- Lock
- Black Annodised Handle
- Face Plate
- Re-Keyable Euro-cylinder
- Insert Keep

For more information scan the QR code

Lock Dimensions

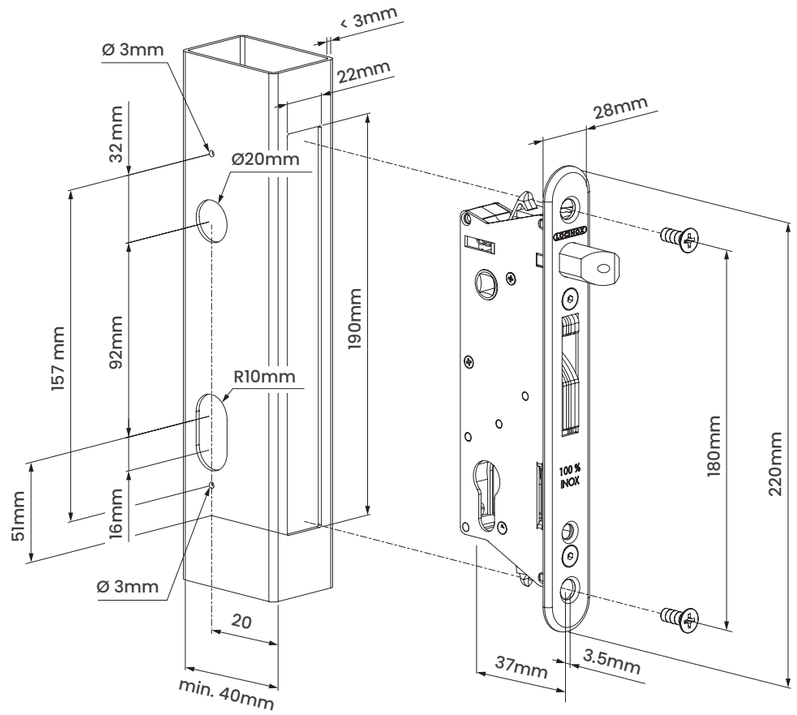

Handle

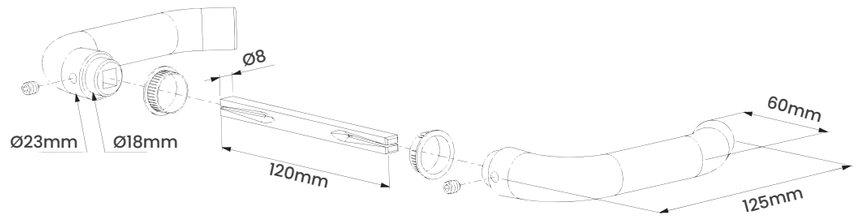

Keep

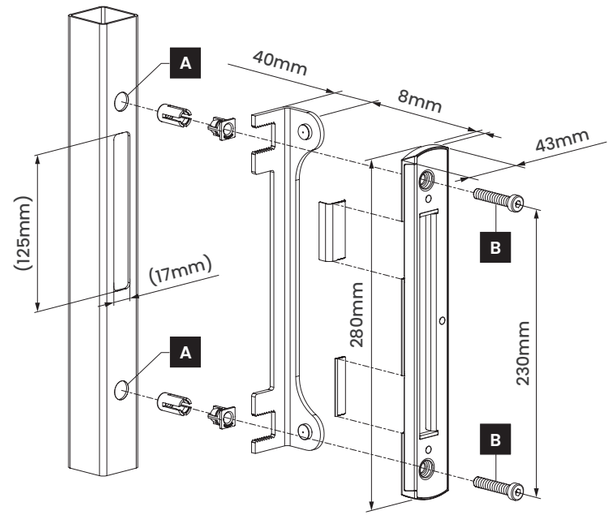

A	B
Ø 15mm	
Ø 5mm	

Application Photo